PIONEER®
The future of sound and vision.

Service Manual

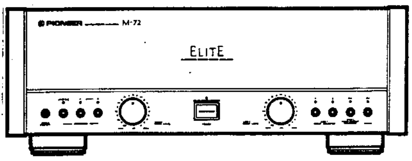

ORDER NO.
ARP2100

2CH/4CH POWER AMPLIFIER

M-72

MODEL M − 72 HAS FOLLOWING VERSIONS :

Type	Power requirement	Export destination
KU/CA	AC120V only	U.S.A. and Canada
SD	AC110V,120 − 127V,220V,240V (switchable)	Kingdom of Saudi Arabia and General market

- **This manual is applicable to the M − 72/KU/CA and SD types.**
- **As to the SD type, refer to page 27.**

CONTENTS

1. SAFETY INFORMATION ········· 2
2. SPECIFICATIONS ········· 3
3. EXPLODED VIEWS, PACKING AND PARTS LIST ········· 4
4. SCHEMATIC AND P.C.BOARDS CONNECTION DIAGRAM ········· 8
5. P.C.B 's PARTS LIST ········· 19
6. ADJUSTMENTS ········· 26
7. FOR SD TYPE ········· 27
8. PANEL FACILITIES ········· 28

PIONEER ELECTRONIC CORPORATION 4-1, Meguro 1-Chome, Meguro-ku, Tokyo 153, Japan
PIONEER ELECTRONICS SERVICE INC. P.O. Box 1760, Long Beach, California 90801 U.S.A.
PIONEER ELECTRONICS OF CANADA, INC. 505 Cochrane Drive, Markham, Ontario L3R 8E3 Canada
PIONEER ELECTRONIC [EUROPE] N.V. Keetberglaan 1, 2740 Beveren, Belgium
PIONEER ELECTRONICS AUSTRALIA PTY. LTD. 178-184 Boundary Road, Braeside, Victoria 3195, Australia TEL: [03] 580-9911
© **PIONEER ELECTRONIC CORPORATION** 1990
YV AUG. 1990 Printed in Japan

This service manual is intended for qualified service technicians; it is not meant for the casual do-it-yourselfer. Qualified technicians have the necessary test equipment and tools, and have been trained to properly and safely repair complex products such as those covered by this manual.

Improperly performed repairs can adversely affect the safety and reliability of the product and may void the warranty. If you are not qualified to perform the repair of this product properly and safely, you should not risk trying to do so and refer the repair to a qualified service technician.

WARNING

Lead in solder used in this product is listed by the California Health and Welfare agency as a known reproductive toxicant which may cause birth defects or other reproductive harm (California Health & Safety Code, Section 25249.5).

When servicing or handling circuit boards and other components which contain lead in in solder, avoid unprotected skin contact with the solder. Also, when soldering do not inhale any smoke or fumes produced.

1. SAFETY INFORMATION

(FOR USA MODEL ONLY)

1. SAFETY PRECAUTIONS

The following check should be performed for the continued protection of the customer and service technician.

LEAKAGE CURRENT CHECK

Measure leakage current to a known earth ground (water pipe, conduit, etc.) by connecting a leakage current tester such as Simpson Model 229-2 or equivalent between the earth ground and all exposed metal parts of the appliance (input/output terminals, screwheads, metal overlays, control shaft, etc.). Plug the AC line cord of the appliance directly into a 120V AC 60Hz outlet and turn the AC power switch on. Any current measured must not exceed 0.5mA.

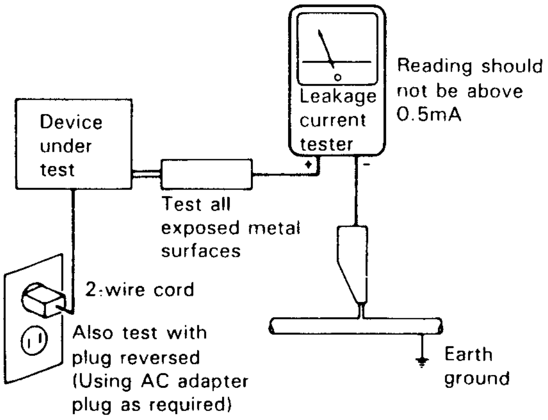
Leakage current tester
Reading should not be above 0.5mA
Device under test
Test all exposed metal surfaces
2-wire cord
Also test with plug reversed (Using AC adapter plug as required)
Earth ground

AC Leakage Test

ANY MEASUREMENTS NOT WITHIN THE LIMITS OUTLINED ABOVE ARE INDICATIVE OF A POTENTIAL SHOCK HAZARD AND MUST BE CORRECTED BEFORE RETURNING THE APPLIANCE TO THE CUSTOMER.

2. PRODUCT SAFETY NOTICE

Many electrical and mechanical parts in the appliance have special safety related characteristics. These are often not evident from visual inspection nor the protection afforded by them necessarily can be obtained by using replacement components rated for voltage, wattage, etc. Replacement parts which have these special safety characteristics are identified in this Service Manual.

Electrical components having such features are identified by marking with a ⚠ on the schematics and on the parts list in this Service Manual.

The use of a substitute replacement component which dose not have the same safety characteristics as the PIONEER recommended replacement one, shown in the parts list in this Service Manual, may create shock, fire, or other hazards.

Product Safety is continuously under review and new instructions are issued from time to time. For the latest information, always consult the current PIONEER Service Manual. A subscription to, or additional copies of, PIONEER Service Manual may be obtained at a nominal charge from PIONEER.

2. SPECIFICATIONS

Amplifier Section

When set to 2 CH:

Continuous average power output is 100 Watts* per channel, min., at 8 ohms from 20 Hertz to 20,000 Hertz with no more than 0.009% total harmonic distortion (AMP 1);

Continuous average power output is 130 Watts* per channel, min., at 4 ohms from 20 Hertz to 20,000 Hertz with no more than 0.03 % total harmonic distortion (AMP 1);

When set to 4 CH:

Continuous average power output is 50 Watts* per channel, min., at 8 ohms from 20 Hertz to 20,000 Hertz with no more than 0.02% total harmonic distortion (AMP 1, AMP 2);

Continuous average power output is 65 Watts* per channel, min., at 4 ohms from 20 Hertz to 20,000 Hertz with no more than 0.04% total harmonic distortion (AMP 1, AMP 2);

Dynamic power (EIA test signal)	
8 Ω	140 W + 140 W
4 Ω	190 W + 190 W
2 Ω	210 W + 210 W
Harmonic distortion (2 CH)	
20 Hz – 20 kHz, 50 W, 8 Ω	0.005%
Input terminals (sensitivity/input impedance)	
AMP 1 INPUT 1, 2, AMP 2 INPUT	1 V/40 kΩ
Frequency response	
AMP 1 INPUT 1, 2, AMP 2 INPUT	5 Hz – 150 kHz $^{+0}_{-3}$ dB
Signal-to-Noise ratio (short circuit, A network)	
AMP 1 INPUT 1, 2, AMP 2 INPUT	
2 CH	120 dB

Power section, etc.

Power requirements	AC 120 V, 60 Hz
Power consumption	630 W, 800 VA
External dimensions	459 (W) x 422 (D) x 163 (H) mm 18-1/16 (W) x 16-9/16 (D) x 6-7/16 (H) in
Weight	21.4 kg (47 lb 3 oz)

Accessories

Operating instructions	1
Pin-plug cord	1
Spacer set	1

NOTE:
Specifications and design subject to possible modification without notice, due to improvements.

* *Measured pursuant to the Federal Trade Commission's Trade Regulation rule on Power Claims for Amplifier.*

3. EXPLODED VIEWS, PACKING AND PARTS LIST

NOTES:

- *Parts without part number cannot be supplied.*
- *The ⚠ mark found on some component parts indicates the importance of the safety factor of the part. Therefore, when replacing, be sure to use parts of identical designation.*
- *Parts marked by "◉" are not always kept in stock. Their delivery time may be longer than usual or they may be unavailable.*

Parts list of Exterior and packing

Mark	No.	Description	Parts No.
	1	INPUT ASSEMBLY	AWZ3055
	2	PS ASSEMBLY	AWZ3058
	3	KNOB	AAB1175
	4	PUSH KNOB	AAD1366
	5	KNOB (POWER)	AAD1835
	6	NAME PLATE (METAL)	AAM1001
	7	SP−LCH ASSEMBLY	AWZ3060
	8	SP−RCH ASSEMBLY	AWZ3061
	9	VOL−F ASSEMBLY	
	10	VOL−R ASSEMBLY	
	11	SCREW (STEEL)	ABA−297
	12	SCREW	ABA−298
	13	SCREW	ABA1004
	14	SCREW (STEEL)	ABA1119
	15	SCREW (STEEL)	ABA1009
	16	SCREW (STEEL)	ABA1011
	17	SCREW (STEEL)	ABA1014
	18	SCREW (STEEL)	ABA1048
	19	SCREW (STEEL)	ABA1050
	20	SCREW (STEEL)	ABA1086
	21	SCREW	ABA1088
	22	WASHER	ABE1009
	23	WASHER	ABF1017
	24	COIL SPRING A	ABH1056
	25	FLANGE NUT M9	ABN-048
	26	NUT	ABN-065
	27	PULG CORD	ADE1013
⚠	28	AC POWER CORD	ADG1076
	29	LEAD WIRE	
	30	LEAD WIRE	
	31	SPACER SET	AEA1010
	32	CUSHION C (RUBBER)	
	33	CUSHION (RUBBER)	
	34	....	
	35	COVER	
	36	....	
	37	PCB HOLDER	
	38	SPACER	
	39	WOOD COLLOR	AEC1165
	40	BARRIER	
	41	BARRIER	
	42	REG ASSEMBLY	
	43	SHEET	AEE1014
	44	FRONT ASSEMBLY	AWZ3063
	45	HEAD PHONE ASSEMBLY	
	46	STYROL PROTECTOR	AHA1033
	47	STYROL PROTECTOR	AHA1034
	48	PACKING CASE	AHD1923
	49	....	
	50	PACKING SHEET	
	51	TERMINAL SCREW	
	52	SHORT PIN PLUG	AKM-050
	53	PANEL BASE	AMB1685
	54	FOOT	AMR1158
	55	FOOT	AMR1159
	56	INDICATING LENS	AMR1160
	57	HOLDER	AMR1178
	58	HEAT SINK HOLDER	AMR2193
	59	SIDE BOARD	AMS1049
	60	SIDE BOARD	AMS1050
	61	SIDE FRAME R	
	62	SIDE FRAME L	
	63	TRANS. FRAME	
	64	FRONT PANEL	ANB1418
	65	REAR PANEL	
	66	PANEL STAY	
	67	METAL BONNET	ANE1253
	68	BOTTOM PLATE	
	69	AC CORD SPACER	ANG1153
	70	PCB HOLDER	ANG1474
	71	EARTH PLATE	
	72	HEAT SINK A	
	73	HEAT SINK B	
	74	HEAT SINK C	
	75	HEAT SINK D	
	76	SUB HEAT SINK	ANH1303
	77	SHIELD CASE	
	78	SHAFT	ANL1033
	79	OPERATING INSTRUCTIONS (KU/CA)	ARB1265
	80	BIAS 2 ASSEMBLY	

Mark	No.	Description	Parts No.
	81	BIAS 3 ASSEMBLY	
	82	BIAS 4 ASSEMBLY	
	83	SCREW	BBZ40P080FZK
	84	NUT	NK90FCU
	85	PIN JACK ASSEMBLY	
	86	SCREW	VMZ30P060FCU
⚠	87	ELECTROLYTIC CAPACIT (,C1)	ACH1160
⚠	88	CKA (0.01/AC400V, C2)	ACG1003
⚠	89	FUSE (800MA, FU1)	AEK−118
⚠	90	FUSE (800MA, FU2)	AEK−118
⚠	91	FUSE (6.3A, FU5)	AEK−309
⚠	92	FUSE (6.3A, FU6)	AEK−309
⚠	93	TRANSISTOR (Q1)	2SC3281
⚠	94	TRANSISTOR (Q2)	2SC3281
⚠	95	TRANSISTOR (Q3)	2SA1302
⚠	96	TRANSISTOR (Q4)	2SA1302
⚠	97	TRANSISTOR (Q5)	2SA1302
⚠	98	TRANSISTOR (Q6)	2SA1302
⚠	99	TRANSISTOR (Q7)	2SC3281
⚠	100	TRANSISTOR (Q8)	2SC3281
⚠	101	PUSH SWITCH (S1)	ASG−553
⚠	102	POWER TRANSFORMER (T1)	ATS1296
⚠	103	POWER TRANSFORMER (T2)	ATS1297
⚠	104	BIAS 1 ASSEMBLY	
⚠	105	POWER 1 ASSEMBLY	AWZ3072
⚠	106	POWER 2 ASSEMBLY	AWZ3073
⚠	107	POWER 3 ASSEMBLY	AWZ3074
⚠	108	POWER 4 ASSEMBLY	AWZ3075

packing

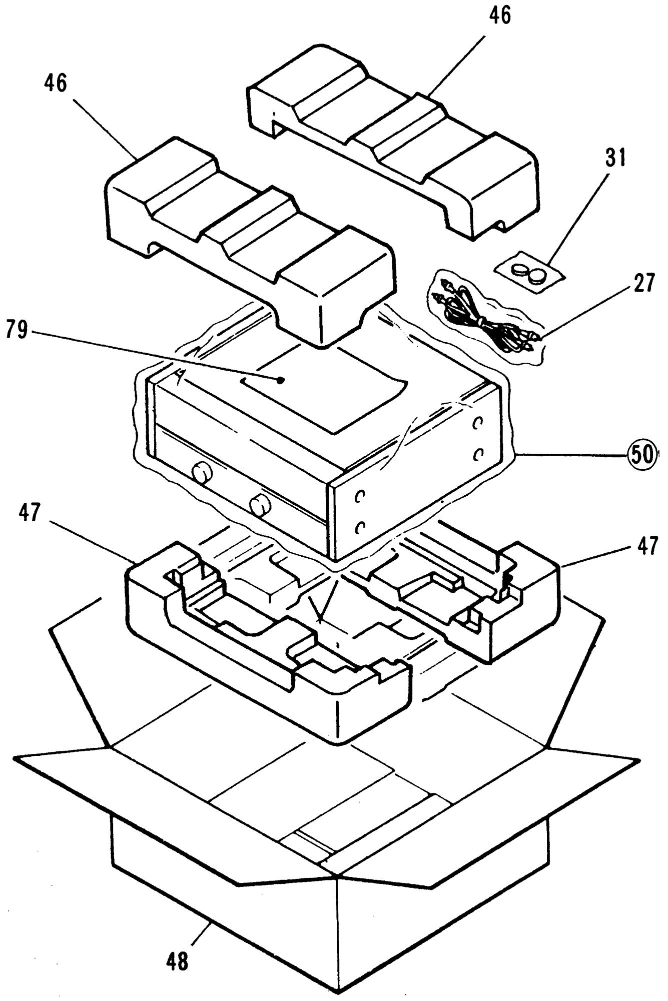
46
46
31
27
79
50
47
47
48

Exterior

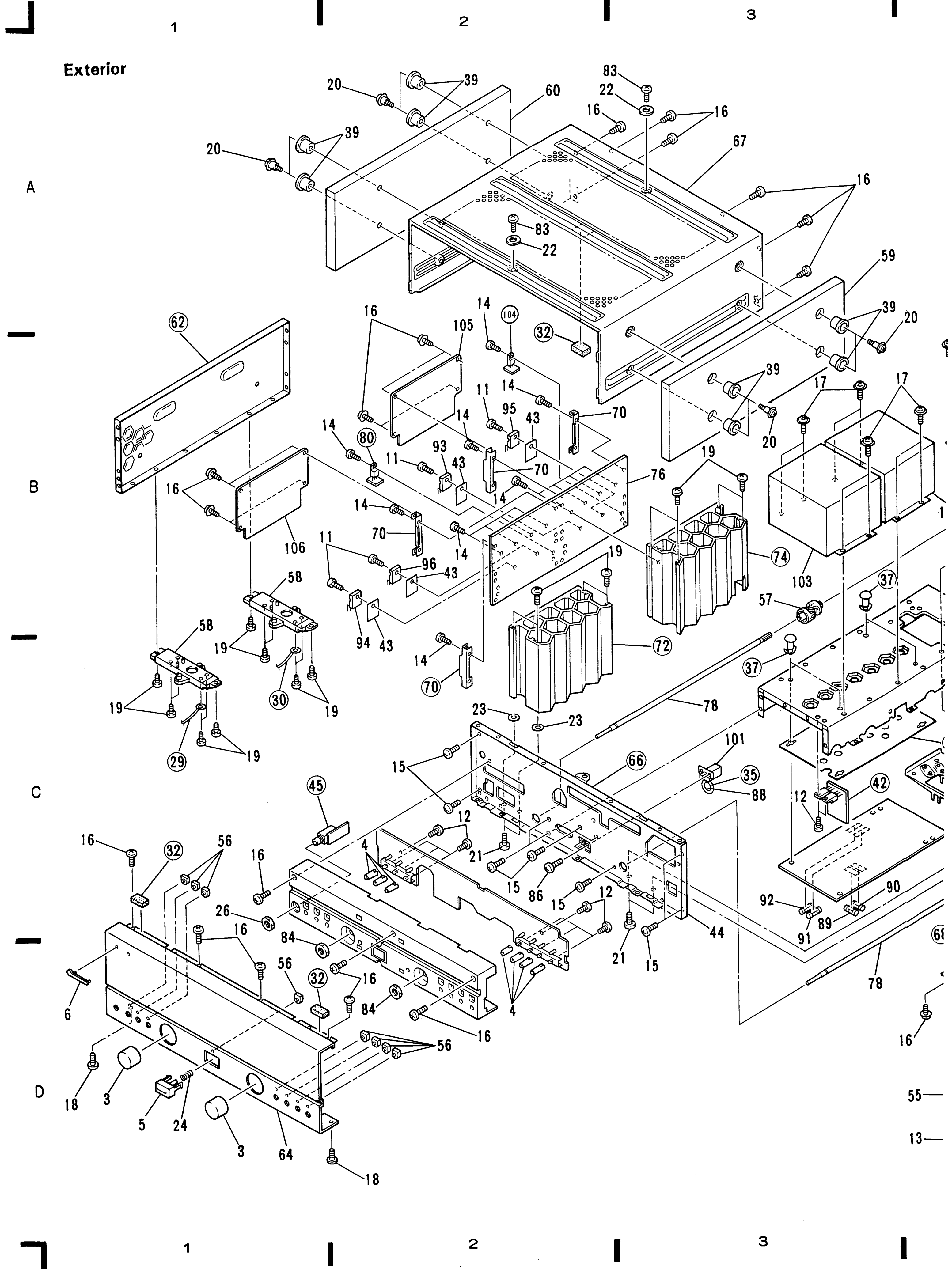
1
2
3
A
B
C
D
20
39
39
60
83
22
16
16
67
20
39
16
83
22
59
62
16
105
14
104
32
39
20
14
11
95
43
70
17
17
14
80
93
43
70
76
19
20
16
14
70
11
96
43
106
58
19
14
74
103
37
57
58
19
19
30
19
94
43
14
70
72
37
23
23
78
19
29
19
15
66
101
35
88
12
42
45
16
32
56
16
4
12
21
15
86
15
12
92
90
89
91
26
84
16
56
32
16
84
16
21
15
44
4
78
6
56
18
3
5
24
3
64
18
16
55
13
1
2
3

Exterior

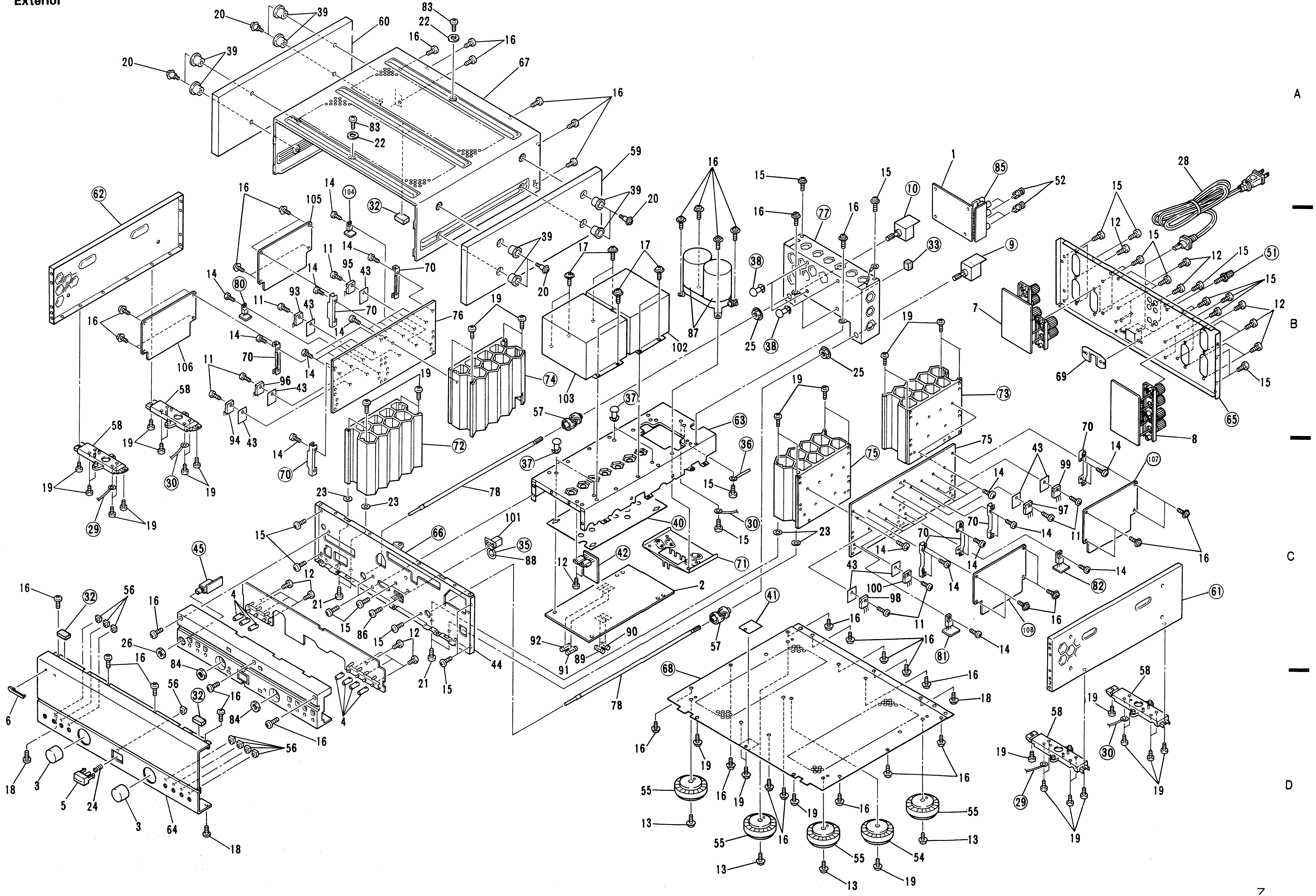

4. SCHEMATIC AND P.C.BOARDS CONNECTION DIAGRAM

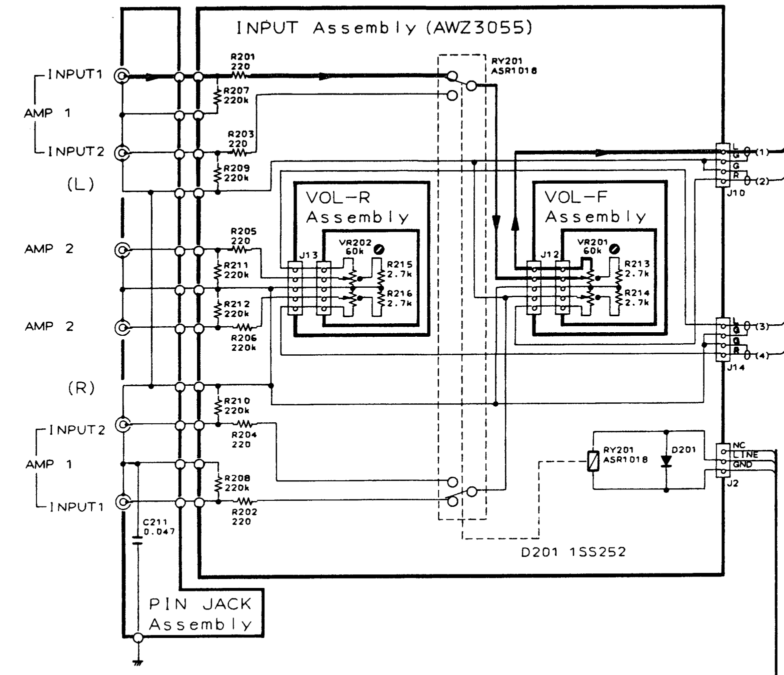
INPUT Assembly (AWZ3055)
INPUT1
AMP 1
INPUT2
(L)
AMP 2
AMP 2
(R)
INPUT2
AMP 1
INPUT1
VOL-R Assembly
VR202 50k
VOL-F Assembly
VR201 50k
RY201 ASR1018
D201
D201 1SS252
PIN JACK Assembly
C211 0.047
J10
J13
J12
J14
J2
NC
LINE
GND

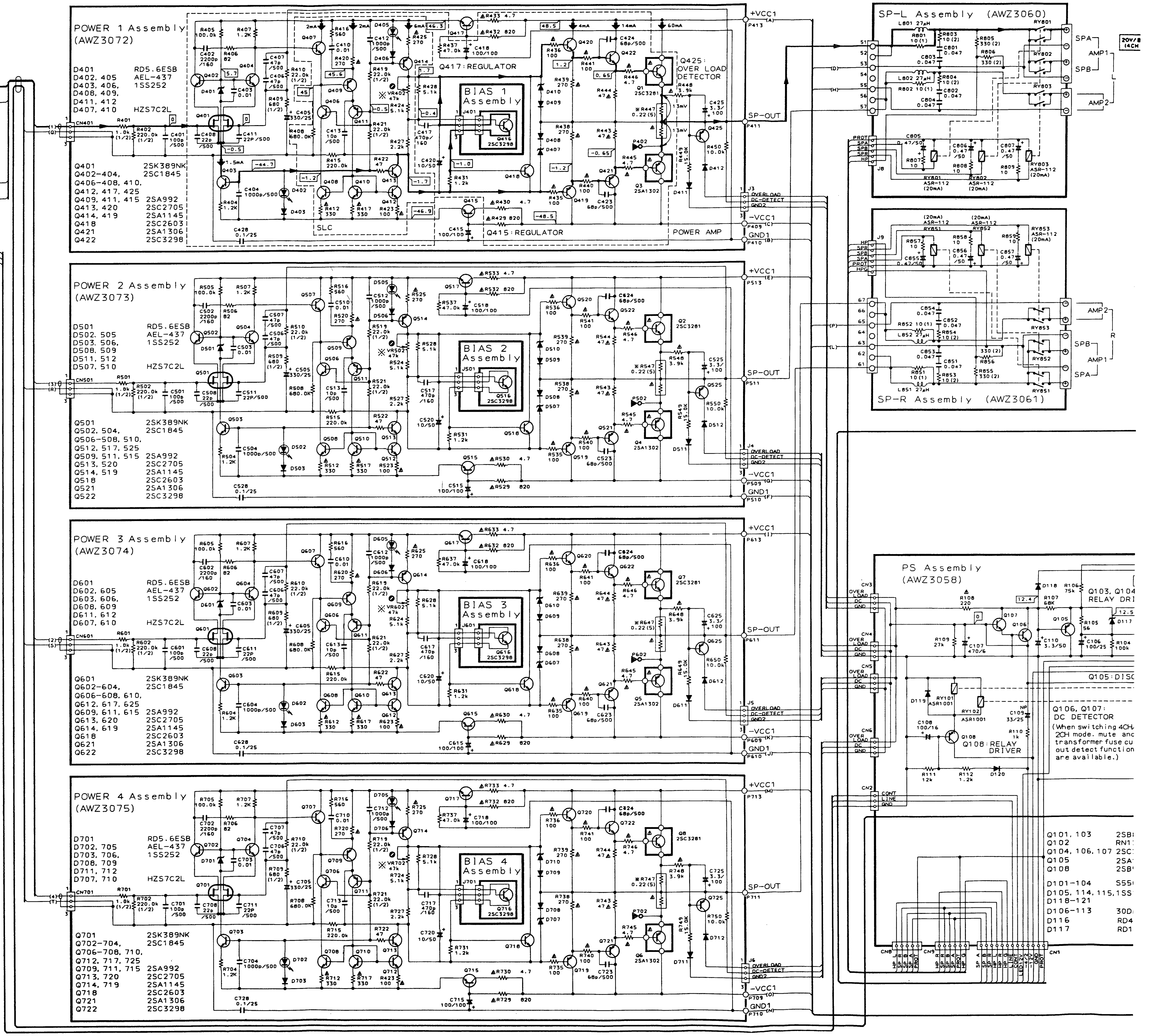
POWER 1 Assembly (AWZ3072)
D401 RD5.6ESB
D402, 405 AEL-437
D403, 406, 1SS252
D408, 409,
D411, 412
D407, 410 HZS7C2L
Q401 2SK389NK
Q402-404, 2SC1845
Q406-408, 410,
Q412, 417, 425
Q409, 411, 415 2SA992
Q413, 420 2SC2705
Q414, 419 2SA1145
Q418 2SC2603
Q421 2SA1306
Q422 2SC3298
CN401
BIAS 1 Assembly
Q416 2SC3298
Q417: REGULATOR
Q415: REGULATOR
Q425: OVER LOAD DETECTOR
Q1 2SC3281
Q3 2SA1302
SLC
POWER AMP
+VCC1
SP-OUT
-VCC1
GND1
OVERLOAD
DC-DETECT
GND2
POWER 2 Assembly (AWZ3073)
D501 RD5.6ESB
D502, 505 AEL-437
D503, 506, 1SS252
D508, 509
D511, 512
D507, 510 HZS7C2L
Q501 2SK389NK
Q502, 504, 2SC1845
Q506-508, 510,
Q512, 517, 525
Q509, 511, 515 2SA992
Q513, 520 2SC2705
Q514, 519 2SA1145
Q518 2SC2603
Q521 2SA1306
Q522 2SC3298
CN501
BIAS 2 Assembly
Q2 2SC3281
Q4 2SA1302
POWER 3 Assembly (AWZ3074)
D601 RD5.6ESB
D602, 605 AEL-437
D603, 606, 1SS252
D608, 609
D611, 612
D607, 610 HZS7C2L
Q601 2SK389NK
Q602-604, 2SC1845
Q606-608, 610,
Q612, 617, 625
Q609, 611, 615 2SA992
Q613, 620 2SC2705
Q614, 619 2SA1145
Q618 2SC2603
Q621 2SA1306
Q622 2SC3298
CN601
BIAS 3 Assembly
Q7 2SC3281
Q5 2SA1302
POWER 4 Assembly (AWZ3075)
D701 RD5.6ESB
D702, 705 AEL-437
D703, 706, 1SS252
D708, 709
D711, 712
D707, 710 HZS7C2L
Q701 2SK389NK
Q702-704, 2SC1845
Q706-708, 710,
Q712, 717, 725
Q709, 711, 715 2SA992
Q713, 720 2SC2705
Q714, 719 2SA1145
Q718 2SC2603
Q721 2SA1306
Q722 2SC3298
CN701
BIAS 4 Assembly
Q8 2SC3281
Q6 2SA1302
SP-L Assembly (AWZ3060)
SPA
AMP1
SPB
AMP2
RY801
RY802
RY803 ASR-112 (20mA)
SP-R Assembly (AWZ3061)
RY851
RY852
RY853 ASR-112 (20mA)
J8
J9
PS Assembly (AWZ3058)
CN3
CN4
CN5
CN6
OVER LOAD
DC
GND
CN2
CONT
LINE
GND
Q103, Q104 RELAY DRI
Q105: DISC
Q106, Q107: DC DETECTOR
(When switching 4CH/ 2CH mode, mute anc transformer fuse cu out detect function are available.)
Q108: RELAY DRIVER
RY101 ASR1001
RY102 ASR1001
Q101, 103 2SB
Q102 RN1
Q104, 106, 107 2SC
Q105 2SA
Q108 2SB
D101-104 S55
D105, 114, 115, 1SS
D118-121
D106-113 30D
D116 RD4
D117 RD1
CN8
CN9
CN1
HP L
SP R
SP B
SP A
PROT
HP R
HP G
LINE
CONT
LED12V
-12V
GND

1. RESISTORS:
Indicated in Ω, ¼W, ⅛W, ±5% tolerance unless otherwise noted k : kΩ, M : MΩ, (F) : ±1%, (G) : ±2%, (K) : ±10% (M); ±20% tolerance

2. CAPACITORS:
Indicated in capacity (μF)/voltage (V) unless otherwise noted p : pF
Indication without voltage is 50V except electrolytic capacitor.

3. VOLTAGE, CURRENT:

☐ : Signal voltage at [50W (when set to 4ch) 8Ω] output(1kHz)

☐ : DC voltage (V) at no input signal
Value in ( ) is DC voltage at rated power.

⇦ mA : DC current at no input signal

NOTE) Voltage and current are shown in the CH4 mode.

4. OTHERS:

➡ : Signal route.

⊘ : Adjusting point.

The ⚠ mark found on some component parts indicates the importance of the safety factor of the part. Therefore, when replacing, be sure to use parts of identical designation.

※ marked capacitors and resistors have parts numbers.

This is the basic schematic diagram, but the actual circuit may vary due to improvements in design.

5.SWITCHES

S1 POWER SW

FRONT Assembly

S301	INPUT1	ON-OFF
	INPUT2	ON-OFF
	AUTO OUTPUT	ON-OFF
	4CH / 2CH	
S302	SP-A	ON-OFF
	SP-B	ON-OFF
	SP-R	ON-OFF

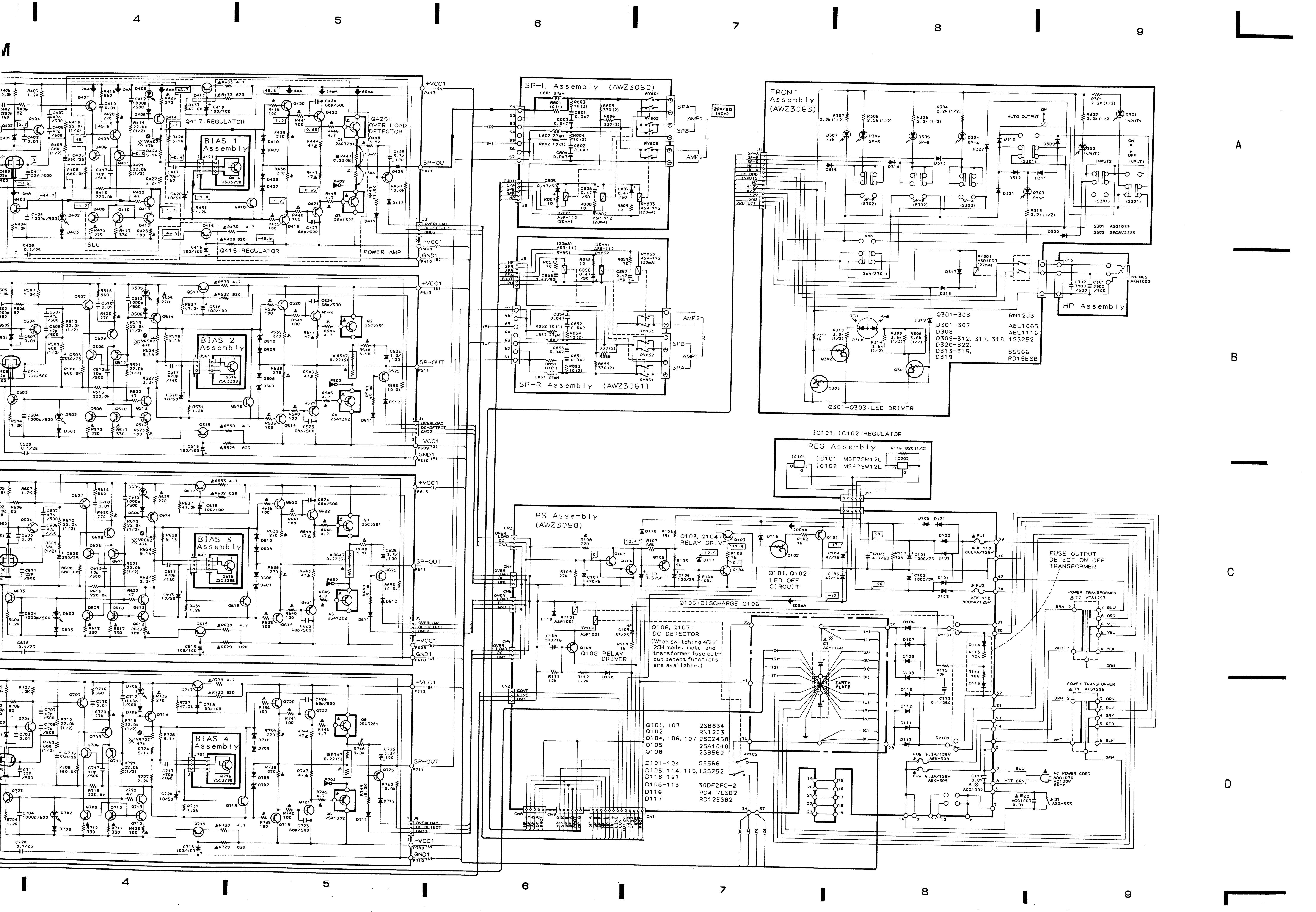

4
5
6
7
8
9
A
B
C
D
+VCC1
-VCC1
GND1
Q417: REGULATOR
Q415: REGULATOR
Q425: OVER LOAD DETECTOR
BIAS 1 Assembly
BIAS 2 Assembly
BIAS 3 Assembly
BIAS 4 Assembly
SLC
POWER AMP
SP-OUT
OVERLOAD
DC-DETECT
GND2
SP-L Assembly (AWZ3060)
SP-R Assembly (AWZ3061)
SPA
SPB
AMP1
AMP2
L
R
20V/8Ω (4CH)
FRONT Assembly (AWZ3063)
AUTO OUTPUT ON OFF
INPUT1
INPUT2
SYNC
HP Assembly
PHONES AKN1002
Q301-303 RN1203
D301-307 AEL1065
D308 AEL1116
D309-312, 317, 318, 1SS252
D320-322,
D313-315, S5566
D319 RD15ESB
Q301-Q303: LED DRIVER
S301 ASG1039
S302 SEC8V222S
IC101, IC102: REGULATOR
REG Assembly
IC101 M5F78M12L
IC102 M5F79M12L
PS Assembly (AWZ3058)
Q103, Q104: RELAY DRIVE
Q101, Q102: LED OFF CIRCUIT
Q105: DISCHARGE C106
Q106, Q107: DC DETECTOR
(When switching 4CH/2CH mode, mute and transformer fuse cut-out detect functions are available.)
Q108: RELAY DRIVER
EARTH PLATE
FUSE OUTPUT DETECTION OFF TRANSFORMER
POWER TRANSFORMER T2 ATS1297
POWER TRANSFORMER T1 ATS1296
AC POWER CORD ADG1076 AC120V 60Hz
S1 ASG-553
Q101, 103 2SB834
Q102 RN1203
Q104, 106, 107 2SC2458
Q105 2SA1048
Q108 2SB560
D101-104 S5566
D105, 114, 115, 1SS252
D118-121
D106-113 30DF2FC-2
D116 RD4.7ESB2
D117 RD12ESB2

A

NOTE

1. This P.C.B connection diagram is viewed from the parts mounted side.
2. The parts which have been mounted on the board can be replaced with those shown with the corresponding wiring symbols listed in the following Table.

P.C.B pattern diagram indication	Corresponding part symbol	Part Name
E 0504	E or E	Transistor
0215	or	Radiator type transistor
D203	D203	Diode
R237	R237	Resistor
C513	+	Capacitor (Polarity)
C518		Capacitor (Non-polarity)

Others

P.C.B. pattern diagram indication	Part Name
IC	IC
S	Switch
RY	Relay
L	Coil
F	Filter
VR	Variable resistor or Semi-fixed resistor

3. The capactor terminal marked with ◎(double circles) shows negatine termianl.
4. The diode terminal marked with ◎(double circles) shows cathode side.
5. The transistor terminal to which E is affixed shows the emitter.

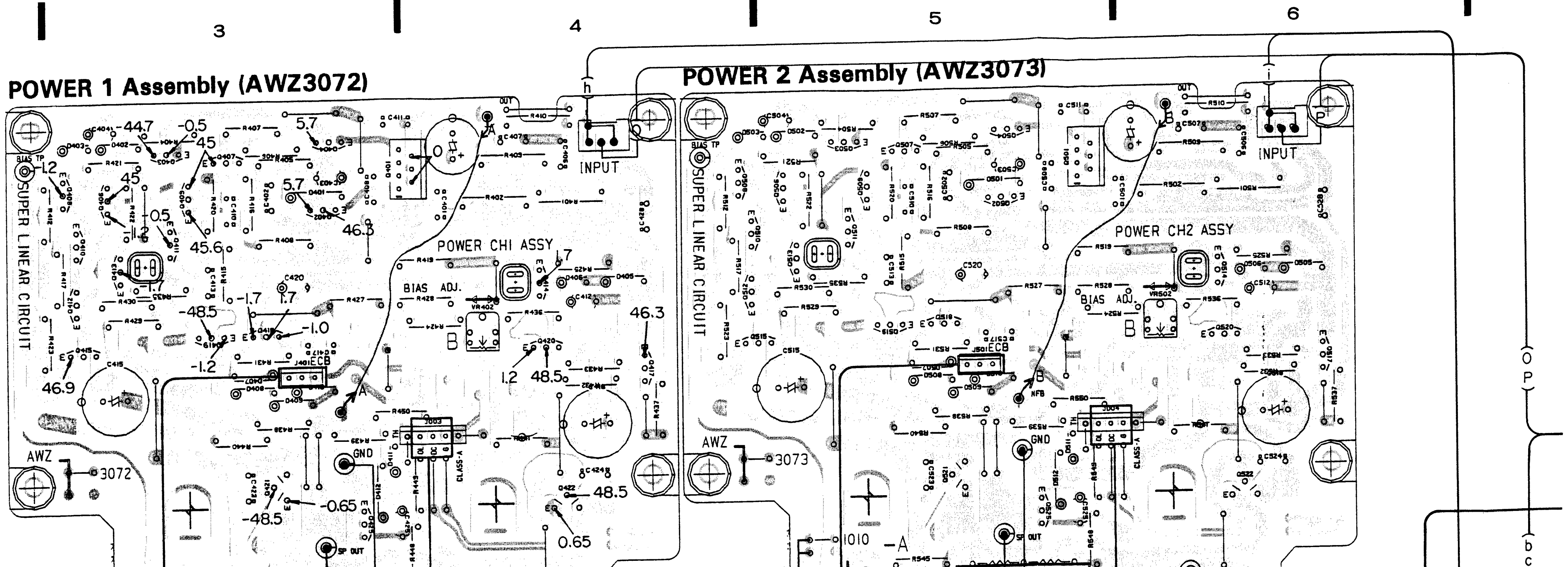
1
2
3
4
5
6
POWER 1 Assembly (AWZ3072)
POWER 2 Assembly (AWZ3073)
SUPER LINEAR CIRCUIT
POWER CH1 ASSY
POWER CH2 ASSY
BIAS ADJ.
INPUT
OUT
GND
AWZ 3072
AWZ 3073
-44.7
-0.5
45
5.7
46.3
45.6
-48.5
-1.7
1.7
-1.0
-1.2
46.9
46.3
1.2
48.5
-0.65
0.65
NFB
CLASS-A
h
i
P
O
A
B

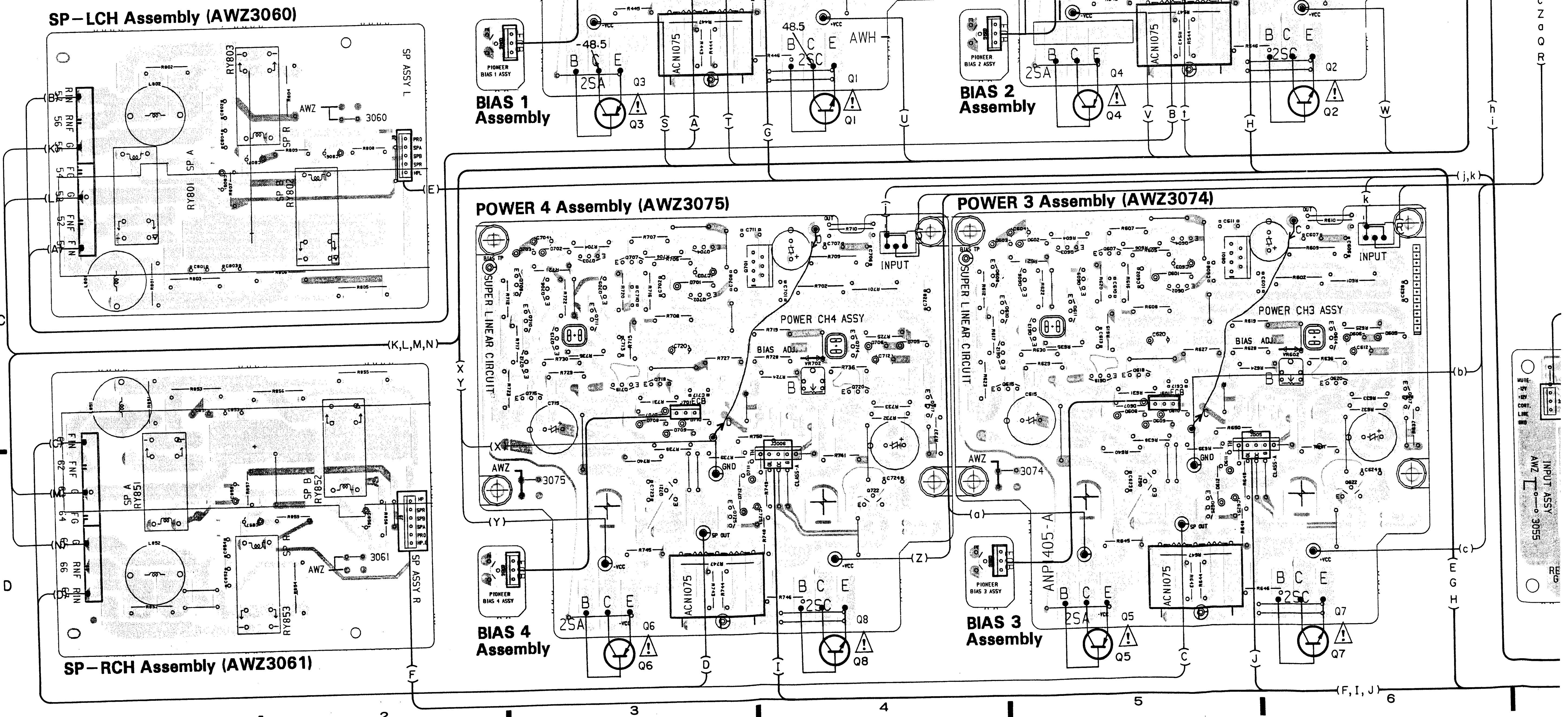
B
C
D
SP-LCH Assembly (AWZ3060)
SP ASSY L
AWZ 3060
RY801
RY802
RY803
SP A
SP B
SP R
R IN
RNF
FG
FNF
F IN
BIAS 1 Assembly
BIAS 2 Assembly
PIONEER BIAS 1 ASSY
PIONEER BIAS 2 ASSY
ACN1075
AWH
2SA
2SC
B C E
Q1
Q2
Q3
Q4
-VCC
+VCC
SP OUT
-48.5
48.5
1010
(E)
(K,L,M,N)
(j,k)
POWER 4 Assembly (AWZ3075)
POWER 3 Assembly (AWZ3074)
POWER CH4 ASSY
POWER CH3 ASSY
SUPER LINEAR CIRCUIT
BIAS ADJ.
INPUT
OUT
GND
CLASS-A
AWZ 3075
AWZ 3074
ANP 405-A
BIAS 4 Assembly
BIAS 3 Assembly
PIONEER BIAS 3 ASSY
PIONEER BIAS 4 ASSY
Q5
Q6
Q7
Q8
SP-RCH Assembly (AWZ3061)
SP ASSY R
AWZ 3061
RY851
RY852
RY853
(a)
(b)
(c)
(Y)
(Z)
(X)
(F,I,J)
S A T G U V B t H W
D I C J F
b c Z a Q R
E G H
INPUT ASSY
AWZ 3055
MUTE
CONT.
LINE
1
2
3
4
5
6

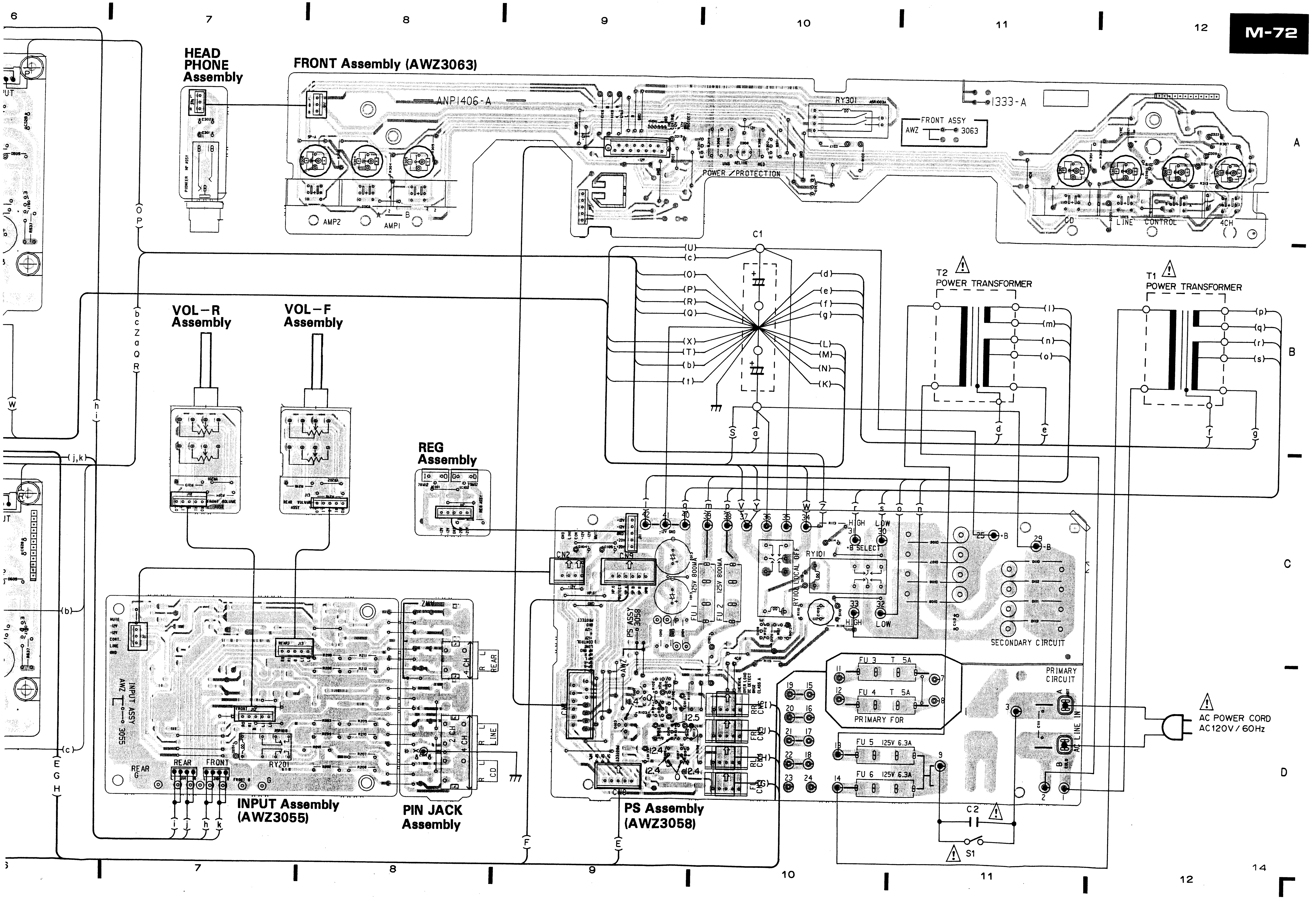
HEAD PHONE Assembly
FRONT Assembly (AWZ3063)
ANP1406-A
RY301
1333-A
FRONT ASSY
AWZ 3063
POWER / PROTECTION
AMP2
AMP1
CD
LINE
CONTROL
4CH
C1
T2
POWER TRANSFORMER
T1
POWER TRANSFORMER
VOL-R Assembly
VOL-F Assembly
REG Assembly
INPUT ASSY AWZ 3055
INPUT Assembly (AWZ3055)
PIN JACK Assembly
REAR
FRONT
RY201
4CH
2CH
REAR
LINE
CD
PS ASSY AWZ 3058
PS Assembly (AWZ3058)
CN2
CN9
CN8
RY101
RY102 LOCAL OFF
+B SELECT
HIGH
LOW
FU 1 125V 800mA
FU 2 125V 800mA
SECONDARY CIRCUIT
PRIMARY CIRCUIT
FU 3 T 5A
FU 4 T 5A
PRIMARY FOR
FU 5 125V 6.3A
FU 6 125V 6.3A
AC LINE IN
C2
S1
AC POWER CORD
AC120V/60Hz
+B
6
7
8
9
10
11
12
14
A
B
C
D

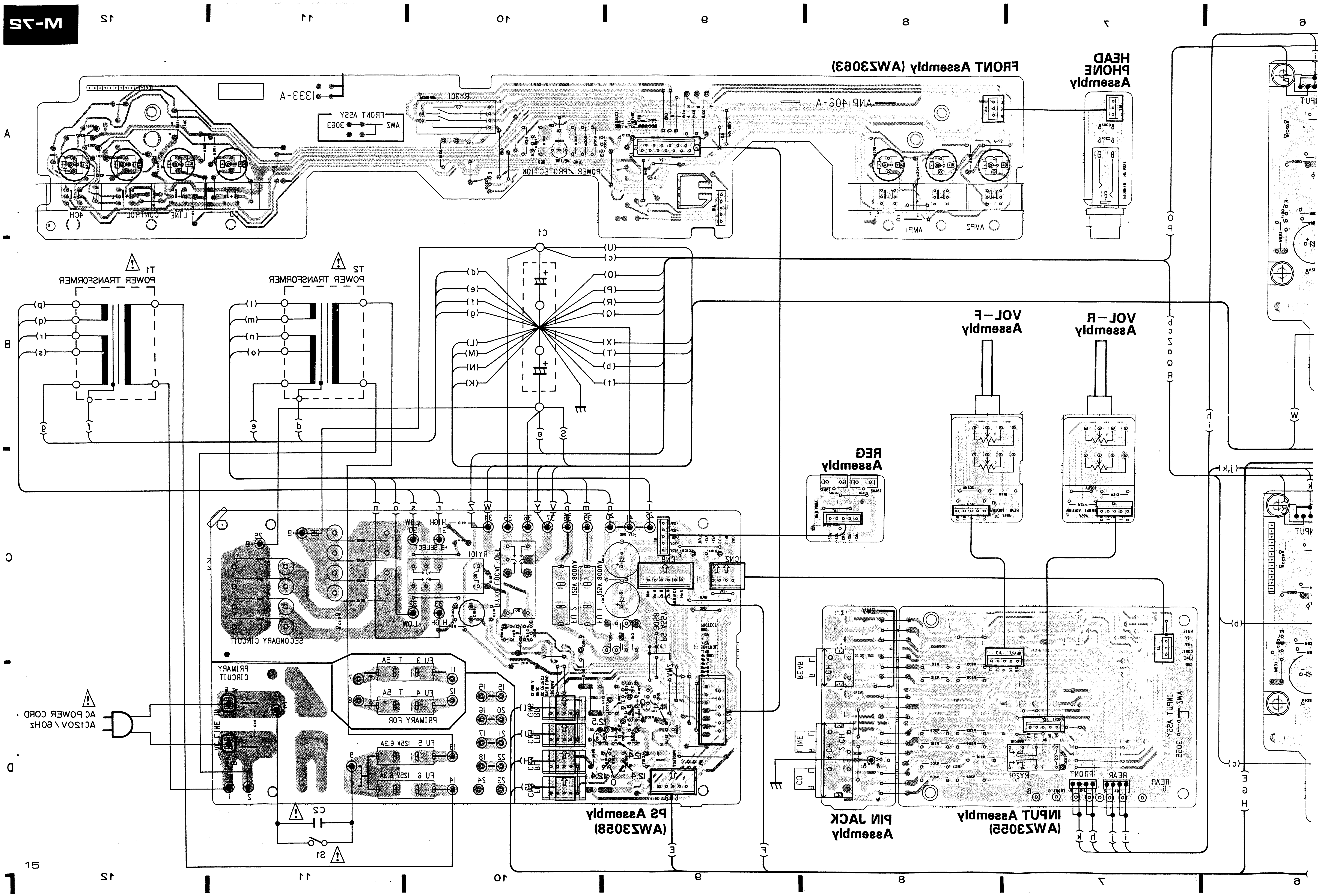
12
11
10
9
8
7
6
A
B
C
D
FRONT Assembly (AWZ3063)
HEAD PHONE Assembly
ANP1406-A
1333-A
FRONT ASSY AWZ 3063
RY301
POWER PROTECTION
4CH
LINE CONTROL
CD
AMP1
AMP2
C1
T1 POWER TRANSFORMER
T2 POWER TRANSFORMER
VOL-F Assembly
VOL-R Assembly
REG Assembly
PS Assembly (AWZ3058)
SECONDARY CIRCUIT
PRIMARY CIRCUIT
PRIMARY FOR
FU 3 T 5A
FU 4 T 5A
FU 5 125V 6.3A
FU 6 125V 6.3A
B SELECT
HIGH
LOW
RY101
CN1
CN2
CN3
CN8
AC POWER CORD AC120V / 60Hz
C2
S1
PIN JACK Assembly
INPUT Assembly (AWZ3055)
INPUT ASSY AWZ 3055
REAR
FRONT
RY201
CD
LINE
REAR
S CH
L CH
4 CH
E
F
G
H

This P.C.B. connection diagram is viewed from the foil side.

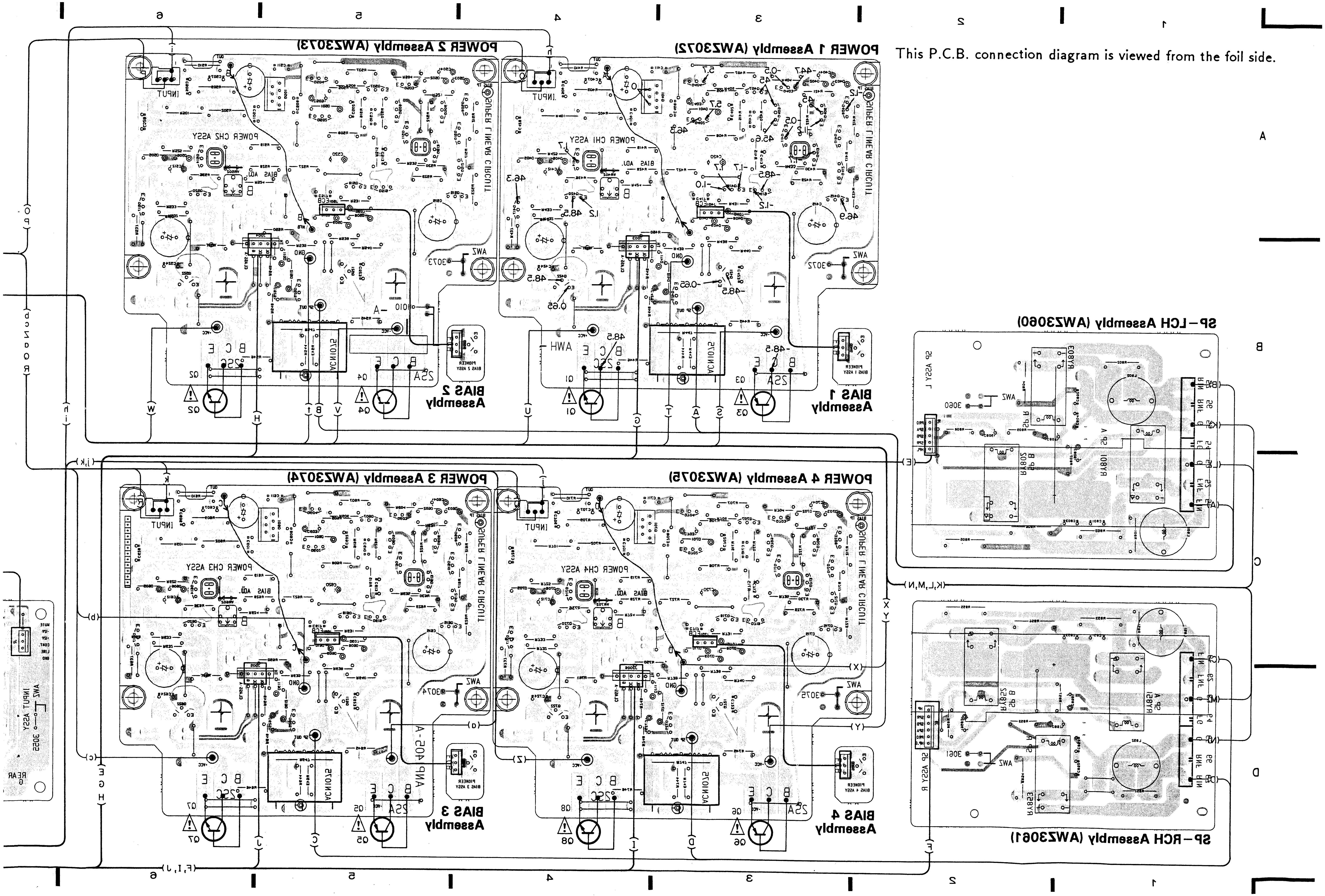
POWER 2 Assembly (AWZ3073)
POWER 1 Assembly (AWZ3072)
BIAS 2 Assembly
BIAS 1 Assembly
SP-LCH Assembly (AWZ3060)
POWER 3 Assembly (AWZ3074)
POWER 4 Assembly (AWZ3075)
BIAS 3 Assembly
BIAS 4 Assembly
SP-RCH Assembly (AWZ3061)
INPUT ASSY
A
B
C
D
1
2
3
4
5
6

5. P.C.B 's PARTS LIST

NOTES:

- *Parts without part number cannot be supplied.*
- *Parts marked by "◉" are not always kept in stock. Their delivery time may be longer than usual or they may be unavailable.*
- *The ⚠ mark found on some component parts indicates the importance of the safety factor of the part. Therefore, when replacing, be sure to use parts of identical designation.*
- *When ordering resistors, first convert resistance values into code form as shown in the following examples.*

  Ex. 1 When there are 2 effective digits (any digit apart from 0), such as 560 ohm and 47k ohm (tolerance is shown by J = 5%, and K = 10%).
  560Ω 56 × 10^1 561........................RD1/4PS$\boxed{5}\boxed{6}\boxed{1}$J
  47kΩ 47 × 10^3 473........................RD1/4PS$\boxed{4}\boxed{7}\boxed{3}$J
  0.5Ω 0R5...RN2H$\boxed{0}\boxed{R}\boxed{5}$K
  1Ω 010...RS1P$\boxed{0}\boxed{1}\boxed{0}$K

  Ex. 2 When there are 3 effective digits (such as in high precision metal film resistors).
  5.62kΩ 562 × 10^1 5621........................RN1/4SR$\boxed{5}\boxed{6}\boxed{2}\boxed{1}$F

BIAS 1 ASSEMBLY

SEMICONDUCTORS

Mark	No.	Description	Parts No.
	Q416	TRANSISTOR	2SC3298

POWER 1 ASSEMBLY (AWZ3072)

SEMICONDUCTORS

Mark	No.	Description	Parts No.
	Q401	N-DUAL-FET	2SK389NK
	Q402−404	TRANSISTOR	2SC1845
	Q406−408	TRANSISTOR	2SC1845
	Q409	TRANSISTOR	2SA992
	Q410	TRANSISTOR	2SC1845
	Q411	TRANSISTOR	2SA992
	Q412	TRANSISTOR	2SC1845
	Q413	TRANSISTOR	2SC2705
	Q414	TRANSISTOR	2SA1145
	Q415	TRANSISTOR	2SA992
	Q417	TRANSISTOR	2SC1845
	Q418	TRANSISTOR	2SC2603
	Q419	TRANSISTOR	2SA1145
	Q420	TRANSISTOR	2SC2705
	Q421	TRANSISTOR	2SA1306
	Q422	TRANSISTOR	2SC3298
	Q425	TRANSISTOR	2SC1845
	D401	ZENER DIODE	RD5.6ESB
	D402	LED (RED)	AEL−437−O
	D403	DIODE	1SS252
	D405	LED (RED)	AEL−437−O
	D406	DIODE	1SS252
	D407	ZENER DIODE	HZS7C2L
	D408,409	DIODE	1SS252
	D410	ZENER DIODE	HZS7C2L
	D411,412	DIODE	1SS252

CAPACITORS

Mark	No.	Description	Parts No.
	C401	MICA CAPACITOR	CMA101J500
	C402	PL. STYRENE CAPACITOR	CQSXA222J160
	C403	AUDIO FILM CAPACITOR	CFTXA103J50
	C404	CERAMIC CAPACITOR	CKDYB102K500
	C405	ELECTROLYTIC CAPACIT	CEXA331M25
	C406,407	MICA CAPACITOR	CMA470J500
	C408	MICA CAPACITOR	CMA220J500
	C410	AUDIO FILM CAPACITOR	CFTXA103J50
	C411	MICA CAPACITOR	CMA220J500
	C412	CERAMIC CAPACITOR	CKDYB102K500
	C413	MICA CAPACITOR	CMA100D500
	C415	ELECTROLYTIC CAPACIT	CEXA101M2A
	C417	PL. STYRENE CAPACITOR	CQSXA471J160
	C418	ELECTROLYTIC CAPACIT	CEXA101M2A
	C420	ELECTROLYTIC CAPACIT	CEXA100M50
	C423,424	MICA CAPACITOR	CMA680J500
	C425	ELECTROLYTIC CAPACIT	CEHAQ3R3M2A
	C428	CERAMIC CAPACITOR	CKCYX104M25

RESISTORS

Mark	No.	Description	Parts No.
	R401	CARBON FILM RESISTOR	RDR1/2PM102J
	R402	CARBON FILM RESISTOR	RDR1/2PM224J
	R404	CARBON FILM RESISTOR	RD1/4PM122J
	R405	CARBON FILM RESISTOR	RD1/4PM104J
	R406	CARBON FILM RESISTOR	RD1/4PM820J

Mark	No.	Description	Parts No.
	R407	CARBON FILM RESISTOR	RD1/4PM122J
	R408	CARBON FILM RESISTOR	RD1/4PM684J
	R409	CARBON FILM RESISTOR	RDR1/2PM681J
	R410	CARBON FILM RESISTOR	RDR1/2PM223J
	R415	CARBON FILM RESISTOR	RDR1/4PM224J
	R416	CARBON FILM RESISTOR	RD1/4PM561J
	R419,421	CARBON FILM RESISTOR	RD1/2PM223J
	R422	CARBON FILM RESISTOR	RD1/4PM470J
	R424	CARBON FILM RESISTOR	RD1/4PM512J
	R427	CARBON FILM RESISTOR	RD1/4PM222J
	R428	CARBON FILM RESISTOR	RD1/4PM512J
	R431	CARBON FILM RESISTOR	RD1/4PM122J
	R437	CARBON FILM RESISTOR	RD1/4PM473J
	R447	RESISTOR (0.33, 5W)	ACN1075
	R448	CARBON FILM RESISTOR	RD1/4PMF392J
	R449	CARBONFILM RESISTOR	RD1/8PM153J
	R450	CARBONFILM RESISTOR	RD1/4PM103J
	VR402	VR	ACP1045-A
		Other resistors	RFA1/4PS□□□J

POWER 2ASSEMBLY (AWZ3073)

SEMICONDUCTORS

Mark	No.	Description	Parts No.
	Q501	N-DUAL-FET	2SK389NK
	Q502–504	TRANSISTOR	2SC1845
	Q506–508	TRANSISTOR	2SC1845
	Q509	TRANSISTOR	2SA992
	Q510	TRANSISTOR	2SC1845
	Q511	TRANSISTOR	2SA992
	Q512	TRANSISTOR	2SC1845
	Q513	TRANSISTOR	2SC2705
	Q514	TRANSISTOR	2SA1145
	Q515	TRANSISTOR	2SA992
	Q517	TRANSISTOR	2SC1845
	Q518	TRANSISTOR	2SC2603
	Q519	TRANSISTOR	2SA1145
	Q520	TRANSISTOR	2SC2705
	Q521	TRANSISTOR	2SA1306
	Q522	TRANSISTOR	2SC3298
	Q525	TRANSISTOR	2SC1845
	D501	ZENER DIODE	RD5.6ESB
	D502	LED(RED)	AEL-437-O
	D503	DIODE	1SS252
	D505	LED(RED)	AEL-437-O
	D506	DIODE	1SS252
	D507	ZENER DIODE	HZS7C2L
	D508,509	DIODE	1SS252
	D510	ZENER DIODE	HZS7C2L
	D511,512	DIODE	1SS252

CAPACITORS

Mark	No.	Description	Parts No.
	C501	MICA CAPACITOR	CMA101J500
	C502	PL.STYRENE CAPACITOR	CQSXA222J160
	C503	AUDIO FILM CAPACITOR	CFTXA103J50
	C504	CERAMIC CAPACITOR	CKDYB102K500
	C505	ELECTROLYTIC CAPACIT	CEXA331M25
	C506,507	MICA CAPACITOR	CMA470J500
	C508	MICA CAPACITOR	CMA220J500
	C510	AUDIO FILM CAPACITOR	CFTXA103J50
	C511	MICA CAPACITOR	CMA220J500
	C512	CERAMIC CAPACITOR	CKDYB102K500
	C513	MICA CAPACITOR	CMA100D500
	C515	ELECTROLYTIC CAPACIT	CEXA101M2A
	C517	PL.STYRENE CAPACITOR	CQSXA471J160
	C518	ELECTROLYTIC CAPACIT	CEXA101M2A
	C520	ELECTROLYTIC CAPACIT	CEXA100M50
	C523,524	MICA CAPACITOR	CMA680J500
	C525	ELECTROLYTIC CAPACIT	CEHAQ3R3M2A
	C528	CERAMIC CAPACITOR	CKCYX104M25

RESISTORS

Mark	No.	Description	Parts No.
	R501	CARBON FILM RESISTOR	RDR1/2PM102J
	R502	CARBON FILM RESISTOR	RDR1/2PM224J
	R504	CARBON FILM RESISTOR	RD1/4PM122J
	R505	CARBON FILM RESISTOR	RD1/4PM104J
	R506	CARBON FILM RESISTOR	RD1/4PM820J
	R507	CARBON FILM RESISTOR	RD1/4PM122J
	R508	CARBON FILM RESISTOR	RD1/4PM684J
	R509	CARBON FILM RESISTOR	RDR1/2PM681J

Mark	No.	Description	Parts No.
	R510	CARBON FILM RESISTOR	RDR1/2PM223J
	R515	CARBON FILM RESISTOR	RDR1/4PM224J
	R516	CARBON FILM RESISTOR	RD1/4PM561J
	R519,521	CARBONFILM RESISTOR	RD1/2PM223J
	R522	CARBON FILM RESISTOR	RD1/4PM470J
	R524	CARBON FILM RESISTOR	RD1/4PM512J
	R527	CARBON FILM RESISTOR	RD1/4PM222J
	R528	CARBON FILM RESISTOR	RD1/4PM512J
	R531	CARBON FILM RESISTOR	RD1/4PM122J
	R537	CARBON FILM RESISTOR	RD1/4PM473J
	R547	RESISTOR (0.33, 5W)	ACN1075
	R548	CARBON FILM RESISTOR	RD1/4PMF392J
	R549	CARBONFILM RESISTOR	RD1/8PM153J
	R550	CARBONFILM RESISTOR	RD1/4PM103J
	VR502	VR	ACP1045-A
		Other resistors	RFA1/4PS□□□J

POWER 3 ASSEMBLY (AWZ3074)

SEMICONDUCTORS

Mark	No.	Description	Parts No.
	Q601	N-DUAL-FET	2SK389NK
	Q602–604	TRANSISTOR	2SC1845
	Q606–608	TRANSISTOR	2SC1845
	Q609	TRANSISTOR	2SA992
	Q610	TRANSISTOR	2SC1845
	Q611	TRANSISTOR	2SA992
	Q612	TRANSISTOR	2SC1845
	Q613	TRANSISTOR	2SC2705
	Q614	TRANSISTOR	2SA1145
	Q615	TRANSISTOR	2SA992
	Q617	TRANSISTOR	2SC1845
	Q618	TRANSISTOR	2SC2603
	Q619	TRANSISTOR	2SA1145
	Q620	TRANSISTOR	2SC2705
	Q621	TRANSISTOR	2SA1306
	Q622	TRANSISTOR	2SC3298
	Q625	TRANSISTOR	2SC1845
	D601	ZENER DIODE	RD5.6ESB
	D602	LED(RED)	AEL-437-O
	D603	DIODE	1SS252
	D605	LED(RED)	AEL-437-O
	D606	DIODE	1SS252
	D607	ZENER DIODE	HZS7C2L
	D608,609	DIODE	1SS252
	D610	ZENER DIODE	HZS7C2L
	D611,612	DIODE	1SS252

CAPACITORS

Mark	No.	Description	Parts No.
	C601	MICA CAPACITOR	CMA101J500
	C602	PL.STYRENE CAPACITOR	CQSXA222J160
	C603	AUDIO FILM CAPACITOR	CFTXA103J50
	C604	CERAMIC CAPACITOR	CKDYB102K500
	C605	ELECTROLYTIC CAPACIT	CEXA331M25
	C606,607	MICA CAPACITOR	CMA470J500
	C608	MICA CAPACITOR	CMA220J500
	C610	AUDIO FILM CAPACITOR	CFTXA103J50
	C611	MICA CAPACITOR	CMA220J500
	C612	CERAMIC CAPACITOR	CKDYB102K500
	C613	MICA CAPACITOR	CMA100D500
	C615	ELECTROLYTIC CAPACIT	CEXA101M2A
	C617	PL.STYRENE CAPACITOR	CQSXA471J160
	C618	ELECTROLYTIC CAPACIT	CEXA101M2A
	C620	ELECTROLYTIC CAPACIT	CEXA100M50
	C623,624	MICA CAPACITOR	CMA680J500
	C625	ELECTROLYTIC CAPACIT	CEHAQ3R3M2A
	C628	CERAMIC CAPACITOR	CKCYX104M25

RESISTORS

Mark	No.	Description	Parts No.
	R601	CARBON FILM RESISTOR	RDR1/2PM102J
	R602	CARBON FILM RESISTOR	RDR1/2PM224J
	R604	CARBON FILM RESISTOR	RD1/4PM122J
	R605	CARBON FILM RESISTOR	RD1/4PM104J
	R606	CARBON FILM RESISTOR	RD1/4PM820J
	R607	CARBON FILM RESISTOR	RD1/4PM122J
	R608	CARBON FILM RESISTOR	RD1/4PM684J
	R609	CARBON FILM RESISTOR	RDR1/2PM681J
	R610	CARBON FILM RESISTOR	RDR1/2PM223J
	R615	CARBON FILM RESISTOR	RDR1/4PM224J

Mark	No.	Description	Parts No.
	R616	CARBON FILM RESISTOR	RD1/4PM561J
	R619,621	CARBONFILM RESISTOR	RD1/2PM223J
	R622	CARBON FILM RESISTOR	RD1/4PM470J
	R624	CARBON FILM RESISTOR	RD1/4PM512J
	R627	CARBON FILM RESISTOR	RD1/4PM222J
	R628	CARBON FILM RESISTOR	RD1/4PM512J
	R631	CARBON FILM RESISTOR	RD1/4PM122J
	R637	CARBON FILM RESISTOR	RD1/4PM473J
	R647	RESISTOR (0.33, 5W)	ACN1075
	R648	CARBON FILM RESISTOR	RD1/4PMF392J
	R649	CARBONFILM RESISTOR	RD1/8PM153
	R650	CARBONFILM RESISTOR	RD1/4PM103J
	VR602	VR	ACP1045
		Other resistors	RFA1/4PS□□□J

POWER 4 ASSEMBLY (AWZ3075)

SEMICONDUCTORS

Mark	No.	Description	Parts No.
	Q701	N-DUAL-FET	2SK389NK
	Q702–704	TRANSISTOR	2SC1845
	Q706–708	TRANSISTOR	2SC1845
	Q709	TRANSISTOR	2SA992
	Q710	TRANSISTOR	2SC1845
	Q711	TRANSISTOR	2SA992
	Q712	TRANSISTOR	2SC1845
	Q713	TRANSISTOR	2SC2705
	Q714	TRANSISTOR	2SA1145
	Q715	TRANSISTOR	2SA992
	Q717	TRANSISTOR	2SC1845
	Q718	TRANSISTOR	2SC2603
	Q719	TRANSISTOR	2SA1145
	Q720	TRANSISTOR	2SC2705
	Q721	TRANSISTOR	2SA1306
	Q722	TRANSISTOR	2SC3298
	Q725	TRANSISTOR	2SC1845
	D701	ZENER DIODE	RD5.6ESB
	D702	LED(RED)	AEL-437-O
	D703	DIODE	1SS252
	D705	LED(RED)	AEL-437-O
	D706	DIODE	1SS252
	D707	ZENER DIODE	HZS7C2L
	D708,709	DIODE	1SS252
	D710	ZENER DIODE	HZS7C2L
	D711,712	DIODE	1SS252

CAPACITORS

Mark	No.	Description	Parts No.
	C701	MICA CAPACITOR	CMA101J500
	C702	PL.STYRENE CAPACITOR	CQSXA222J160
	C703	AUDIO FILM CAPACITOR	CFTXA103J50
	C704	CERAMIC CAPACITOR	CKDYB102K500
	C705	ELECTROLYTIC CAPACIT	CEXA331M25
	C706,707	MICA CAPACITOR	CMA470J500
	C708	MICA CAPACITOR	CMA220J500
	C710	AUDIO FILM CAPACITOR	CFTXA103J50
	C711	MICA CAPACITOR	CMA220J500
	C712	CERAMIC CAPACITOR	CKDYB102K500
	C713	MICA CAPACITOR	CMA100D500
	C715	ELECTROLYTIC CAPACIT	CEXA101M2A
	C717	PL.STYRENE CAPACITOR	CQSXA471J160
	C718	ELECTROLYTIC CAPACIT	CEXA101M2A
	C720	ELECTROLYTIC CAPACIT	CEXA100M50
	C723,724	MICA CAPACITOR	CMA680J500
	C725	ELECTROLYTIC CAPACIT	CEHAQ3R3M2A
	C728	CERAMIC CAPACITOR	CKCYX104M25

RESISTORS

Mark	No.	Description	Parts No.
	R701	CARBON FILM RESISTOR	RDR1/2PM102J
	R702	CARBON FILM RESISTOR	RDR1/2PM224J
	R704	CARBON FILM RESISTOR	RD1/4PM122J
	R705	CARBON FILM RESISTOR	RD1/4PM104J
	R706	CARBON FILM RESISTOR	RD1/4PM820J
	R707	CARBON FILM RESISTOR	RD1/4PM122J
	R708	CARBON FILM RESISTOR	RD1/4PM684J
	R709	CARBON FILM RESISTOR	RDR1/2PM681J
	R710	CARBON FILM RESISTOR	RDR1/2PM223J
	R715	CARBON FILM RESISTOR	RDR1/4PM224J
	R716	CARBON FILM RESISTOR	RD1/4PM561J
	R719,721	CARBONFILM RESISTOR	RD1/2PM223J

Mark	No.	Description	Parts No.
	R722	CARBON FILM RESISTOR	RD1/4PM470J
	R724	CARBON FILM RESISTOR	RD1/4PM512J
	R727	CARBON FILM RESISTOR	RD1/4PM222J
	R728	CARBON FILM RESISTOR	RD1/4PM512J
	R731	CARBON FILM RESISTOR	RD1/4PM122J
	R737	CARBON FILM RESISTOR	RD1/4PM473J
	R747	RESISTOR (0.33, 5W)	ACN1075
	R748	CARBON FILM RESISTOR	RD1/4PMF392J
	R749	CARBONFILM RESISTOR	RD1/8PM153J
	R750	CARBONFILM RESISTOR	RD1/4PM103J
	VR702	VR	ACP1045-A
		Other resistors	RFA1/4PS□□□J

BIAS 2 ASSEMBLY

SEMICONDUCTOR

Mark	No.	Description	Parts No.
	Q516	TRANSISTOR	2SC3298

BIAS 3 ASSEMBLY

SEMICONDUCTOR

Mark	No.	Description	Parts No.
	Q616	TRANSISTOR	2SC3298

BIAS 4 ASSEMBLY

SEMICONDUCTOR

Mark	No.	Description	Parts No.
	Q716	TRANSISTOR	2SC3298

INPUT ASSEMBLY (AWZ3055)

SEMICONDUCTOR

Mark	No.	Description	Parts No.
	D201	DIODE	1SS252

RELAY

Mark	No.	Description	Parts No.
	RY201	RELAY	ASR1018

RESISTORS

Mark	No.	Description	Parts No.
	R201−206	CARBON FILM RESISTOR	RDR1/4PM221J
	R207−212	CARBON FILM RESISTOR	RDR1/4PM224J

VOL−F ASSEMBLY

RESISTORS

Mark	No.	Description	Parts No.
	R213,214	CARBON FILM RESISTOR	RDR1/4PM272J
	VR201	VR (60kΩ)	ACW1006

VOL−R ASSEMBLY

RESISTORS

Mark	No.	Description	Parts No.
	R215,216	CARBON FILM RESISTOR	RDR1/4PM272J
	VR202	VR (60kΩ)	ACW1006

PS ASSEMBLY (AWZ3058)

SEMICONDUCTORS

Mark	No.	Description	Parts No.
	Q101	TRANSISTOR	2SB834
	Q102	TRANSISTOR	RN1203
	Q103	TRANSISTOR	2SB834
	Q104	TRANSISTOR	2SC2458
	Q105	TRANSISTOR	2SA1048
	Q106,107	TRANSISTOR	2SC2458
	Q108	TRANSISTOR	2SB560
	D101−104	DIODE	S5566
	D105	DIODE	1SS252
	D106−113	DIODE	30DF2FC-2
	D114,115	DIODE	1SS252
	D116	ZENER DIODE	RD4.7ESB2
	D117	ZENER DIODE	RD12ESB2
	D118−121	DIODE	1SS252

RELAIES

Mark	No.	Description	Parts No.
	RY101	RELAY	ASR1001
	RY102	RELAY	

CAPACITORS

Mark	No.	Description	Parts No.
	C101,102	ELECTR.CAPACITOR	CEAS102M25
	C103	ELECTR.CAPACITOR	CEAS4R7M50
	C104,105	ELECTR.CAPACITOR	CEAS470M16
	C106	ELECTR.CAPACITOR	CEAS101M25
	C107	ELECTROLYTIC CAPACIT	CEAS471M6
	C108	ELECTR.CAPACITOR	CEAS101M16
	C109	ELECTROLYTIC CAPACIT	CEANP330M25
	C110	ELECTR.CAPACITOR	CEAS3R3M50
	C111	CKA (0.01/AC400V)	ACG1002
	C113	MYLOR FILM CAPACITOR	CQMA104K250

Mark	No.	Description	Parts No.

RESISTORS

	R108	CARBON FILM RESISTOR	RD1/4PMF221J
	R113−115	CARBONFILM RESISTOR	RD1/4PM103J
		Other resistors	RD1/8PM□□□J

OTHERS

	CN1	CONNECTOR(13P)	KPE13
	CN2−6	JUMPER CONNECTOR 3-P	KPC3
	CN8	CONNECTOR(5P)	KPC5
	CN9	JUMPER CONNECTOR	KPC6

REG ASSEMBLY

SEMICONDUCTORS

	IC101	REGULATOR IC	M5F78M12L
	IC102	REGULATOR IC	M5F79M12L

RESISTORS

	R116	CARBON FILM RESISTOR	RD1/2PM821J

SP−LCH ASSEMBLY (AWZ3060)

RELAIES

	RY801−803	RELAY	ASR-112

COILS

	L801,802	COIL	ATH1001

CAPACITORS

	C801−804	AUDIO FILM CAPACITOR	CFTXA473J50
	C805−807	ELECTR.CAPACITOR	CEASR47M50

RESISTORS

	R801,802	METAL OXIDE RESISTOR	RS1PMF100J
	R803,804	METAL OXIDE RESISTOR	RS2LMF100J
	R805,806	METAL OXIDE RESISTOR	RS2LMF331J
	R807−809	CARBON FILM RESISTOR	RD1/4PM100J

OTHERS

		SPEAKER TERMINAL 4-P	AKE1015
		SPEAKER TERMINAL 2-P	AKE1023

Mark	No.	Description	Parts No.

SP−RCH ASSEMBLY (AWZ3061)

RELAIES

	RY851−853	RELAY	ASR-112

COILS

	L851,852	COIL	ATH1001

CAPACITORS

	C851−854	AUDIO FILM CAPACITOR	CFTXA473J50
	C855−857	ELECTR.CAPACITOR	CEASR47M50

RESISTORS

	R851,852	METAL OXIDE RESISTOR	RS1PMF100J
	R853,854	METAL OXIDE RESISTOR	RS2LMF100J
	R855,856	METAL OXIDE RESISTOR	RS2LMF331J
	R857−859	CARBON FILM RESISTOR	RD1/4PM100J

OTHERS

		SPEAKER TERMINAL 4-P	AKE1015
		SPEAKER TERMINAL 2-P	AKE1024

FRONT ASSEMBLY (AWZ3063)

SEMICONDUCTORS

	Q301−303	TRANSISTOR	RN1203
	D301−307	LED(RED)	AEL1065
	D308	LED(RED,AMBER)	AEL1116
	D309−312	DIODE	1SS252
	D313−315	DIODE	S5566
	D317,318	DIODE	1SS252
	D319	ZENER DIODE	RD15ESB
	D320−322	DIODE	1SS252

RELAY

	RY301	RELAY	ASR1003

SWITCHES

	S301	PUSH SWITCH	ASG1039
	S302	PUSH SWITCH	SEC8V222S

RESISTORS

	R311	CARBON FILM RESISTOR	RD1/4PM102J
		Other resistors	RD1/2PM□□□J

Mark	No.	Description	Parts No.

HEAD PHONE ASSEMBLY

CAPACITORS

Mark	No.	Description	Parts No.
	C301,302	CERAMIC CAPACITOR	CKCYB392K500

OTHERS

Mark	No.	Description	Parts No.
		JACK	AKN1002

PIN JACK ASSEMBLY

CAPACITORS

Mark	No.	Description	Parts No.
	C211	AUDIO FILM CAPACITOR	CFTXA473J50

OTHERS

Mark	No.	Description	Parts No.
		PHONO JACK 2-P	AKB1151
		PHONO JACK 4-P	AKB1153

6. ADJUSTMENTS

1. Wait ten minutes after the power has been turned on.
2. Set to the 4 ch mode.
3. Adjust VR402 so that the voltage difference between BIAS TP and the output JP wire on the Power 1 assembly becomes 12mV (±6mV).
4. Following the same procedure as in step 3, adjust VR502 in the Power 2 assembly, VR602 in the Power 3 assembly, and VR702 in the Power 4 assmbly.

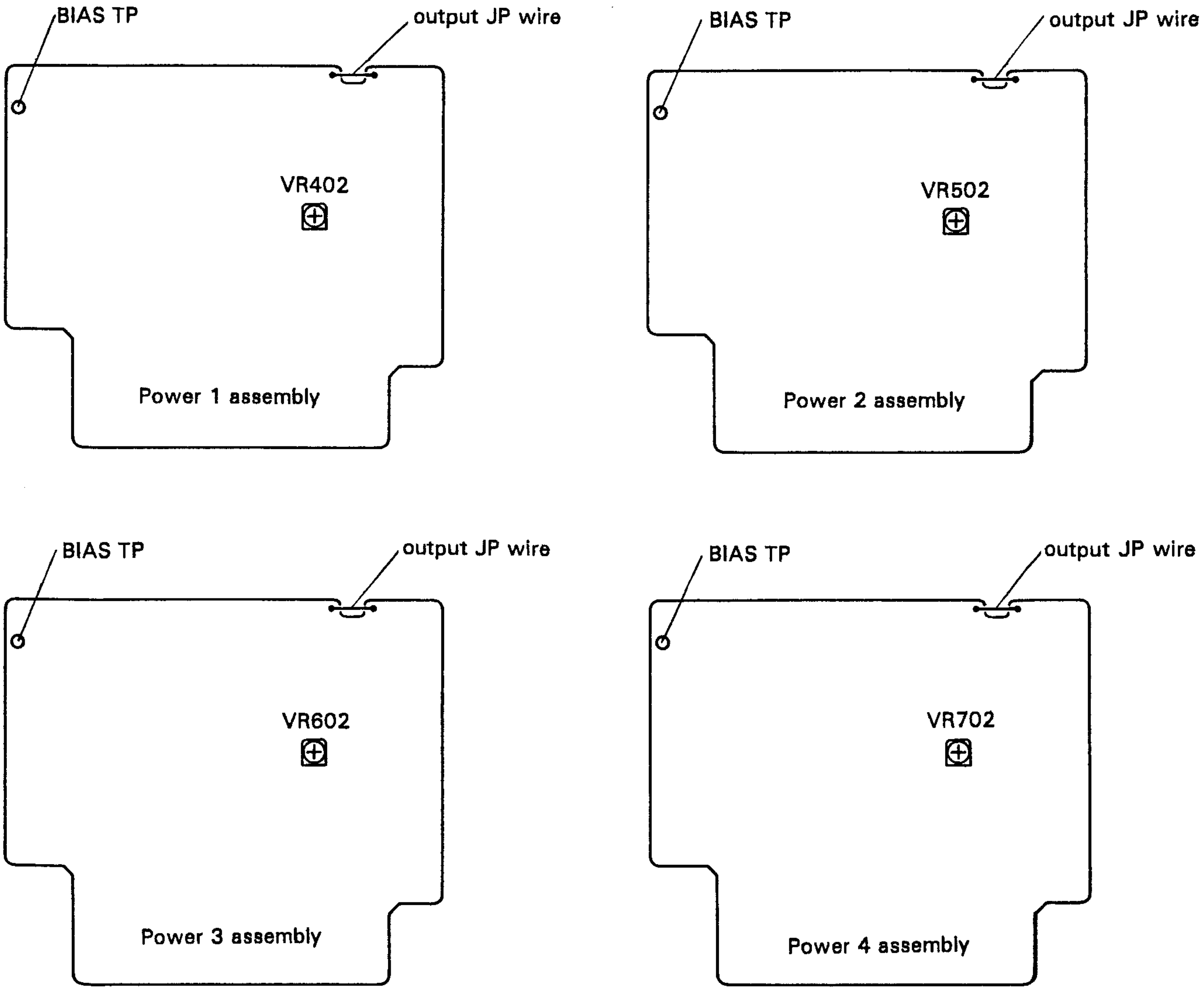
BIAS TP
output JP wire
VR402
Power 1 assembly
BIAS TP
output JP wire
VR502
Power 2 assembly
BIAS TP
output JP wire
VR602
Power 3 assembly
BIAS TP
output JP wire
VR702
Power 4 assembly

Fig. 6 – 1 adjustment point

7. FOR SD TYPE

NOTES:
- *Parts without part number cannot be supplied.*
- *The ⚠ mark found on some component parts indicates the importance of the safety factor of the part. Therefore, when replacing, be sure to use parts of identical designation.*
- *Parts marked by "◉" are not always kept in stock. Their delivery time may be longer than usual or they may be unavailable.*

CONTRAST OF MISCELLANEOUS PARTS

The M−72/SD type is the same as the M−72/KU/CA type with the exception of the following sections.

Mark	Symbol & Description	Part No.		Remarks
		M−72/KU/CA type	M−72/SD type	
⚠	S2 Line voltage selector switch (AC110V,120V−127V,220V,240V)	....	AKX−507	
⚠	T1 Power transformer	ATS1296	ATS1300	
⚠	T2 Power transformer	ATS1297	ATS1301	
⚠	FU5,FU6 Fuse (6.3A/125V)	AEK−309	....	
⚠	FU3−FU6 Fuse (3.15A/125V)	....	AEK−124	
⚠	AC Power cord	ADG1076	ADG1051	
	AC cord spacer	ANG1153	....	
	Strain relief	....	AEC−882	
	Front panel	ANB1418	ANB1417	
	Packing case	AHD1923	AHD1922	
	Operating instructions	ARB1265	ARB1266	

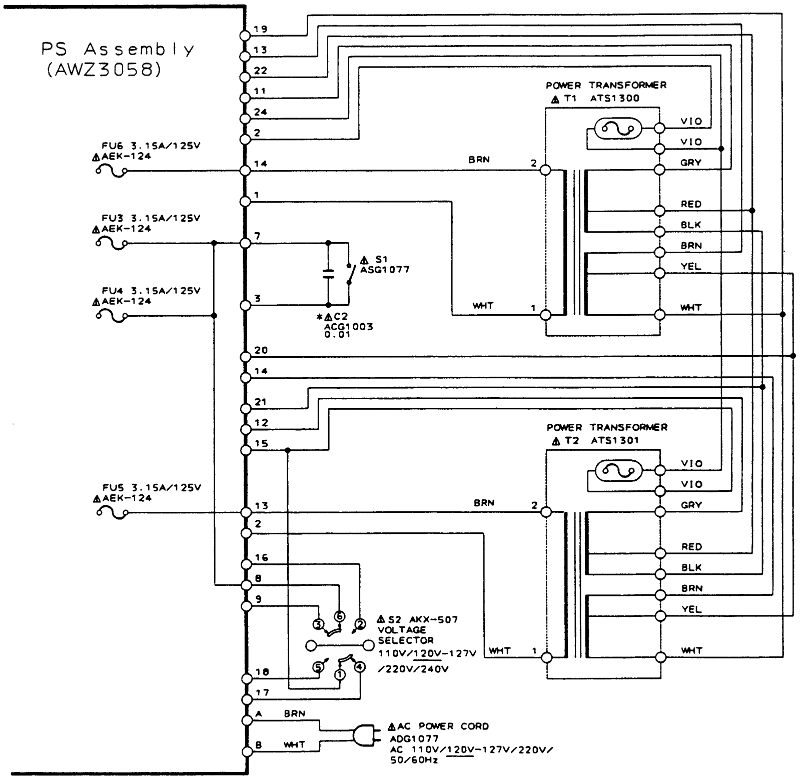
PS Assembly
(AWZ3058)
19
13
22
11
24
2
14
1
7
3
20
14
21
12
15
13
2
16
8
9
18
17
A
B
FU6 3.15A/125V
⚠AEK-124
FU3 3.15A/125V
⚠AEK-124
FU4 3.15A/125V
⚠AEK-124
FU5 3.15A/125V
⚠AEK-124
⚠ S1
ASG1077
*⚠C2
ACG1003
0.01
POWER TRANSFORMER
⚠ T1 ATS1300
POWER TRANSFORMER
⚠ T2 ATS1301
BRN
WHT
VIO
VIO
GRY
RED
BLK
BRN
YEL
WHT
⚠S2 AKX-507
VOLTAGE
SELECTOR
110V/120V-127V
/220V/240V
⚠AC POWER CORD
ADG1077
AC 110V/120V-127V/220V/
50/60Hz

8. PANEL FACILITIES

FRONT PANEL

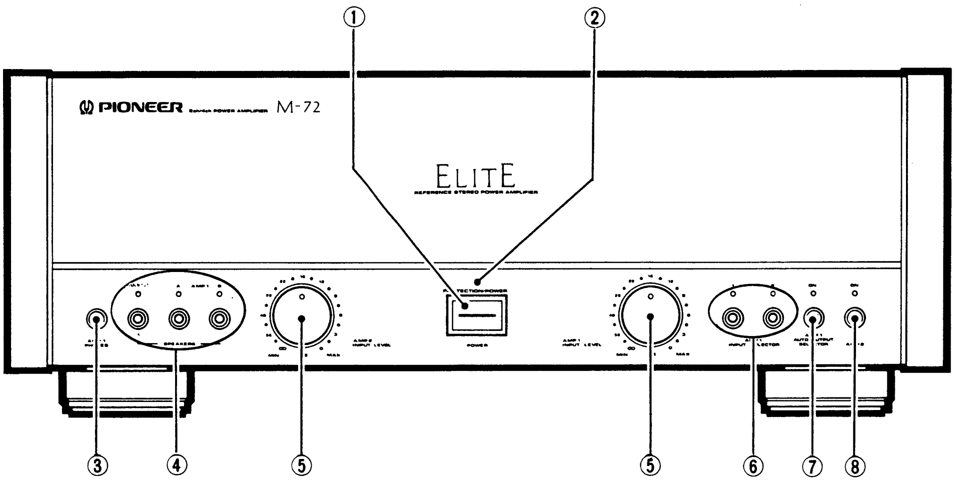

① POWER switch

Press to turn power to this unit ON/OFF.

② PROTECTION/POWER indicator

Lights when the power is turned ON.

Red (protection): Lights immediately after turning on the power, or in the event of a malfunctioning input from the control amplifier or a shorted output. When lighted, the amplifier will not operate.

Yellow (power): Indicates normal operating condition.

③ AMP 1 PHONES jack

When using headphones, connect their plug here.

④ SPEAKERS switches

Use to select the speaker system used.

[AMP 1 A] – Sound is heard from the speaker system connected to the AMP 1 SPEAKERS A terminals.

[AMP 1 B] – Sound is heard from the speaker system connected to the AMP 1 SPEAKERS B terminals.

[AMP 2 C] – Sound is heard from the speaker system connected to the AMP 2 SPEAKERS C terminals.

⑤ AMP 1 INPUT LEVEL/AMP 2 INPUT LEVEL control

Use to adjust the input level connected to the rear panel 2 CH/AMP 1 and AMP 2 terminals.

⑥ AMP 1 INPUT SELECTOR

Use to select the component you wish to play back (amplify).

[INPUT 1] – The component connected to the Control Amplifier.

[INPUT 2] – The component connected to CD.

⑦ AMP 1 AUTO OUTPUT SELECTOR

This only operates when AMP 2 is ON.

When AMP 1 Auto Output Selector is ON:

If AMP 1 input selector 1 is pressed, the speakers AMP 1A turns on automatically.

If AMP 1 input selector 2 is pressed, the speakers AMP 1B turns on automatically.

This is convenient when used with the SP-91D.

NOTE:

Before pressing the auto output selector, turn on both speakers AMPs 1 A and B. Automatic selection will not operate if they are off.

If Auto output selector is off, turn speakers AMPs 1 A and B on and off manually.

⑧ AMP 2 switch

Turn on for 4 ch mode.

Turn off for 2 ch mode.

Turn off the power switch before turning this switch ON or OFF.

REAR PANEL

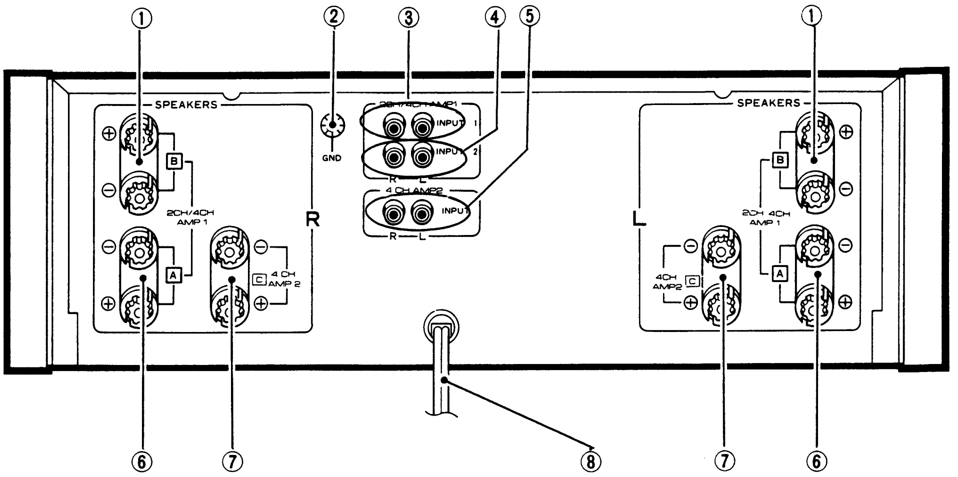

① 2 CH/4 CH AMP 1 SPEAKERS B (L, R) terminals.

Connect R to the right-side speakers of speaker system B (second speaker system), and connect L to the left-side speakers.

② Ground terminal (GND)

③ 2 CH/4 CH AMP 1 (INPUT 1) terminals

For use with a sound field controller or a control amplifier.

④ 2 CH/4 CH AMP 1 (INPUT 2) terminals

For use with another audio device or a second control amplifier.

⑤ 4 CH AMP 2 (INPUT) terminals.

For use with a sound field controller (only operates in 4 ch mode).

⑥ 2 CH/4 CH AMP 1 SPEAKERS A (L, R) terminals

Connect R to the right-side speakers of speaker system A (first speaker system), and connect L to the left-side speakers.

⑦ 4 CH AMP 2 SPEAKERS C (L, R) terminals

Connect R to the right-side speakers of speaker system, and connect L to the left-side speakers (There is no output in 2 ch operation mode. This only operates in 4 ch operation mode.).

⑧ Power cord

CONNECTING THE POWER CORD

Household electrical outlets are provided with specific polarity, a live side and a neutral (ground) side. This unit utilizes such polarity in order to improve sound quality. As shown in the illustration, be sure to insert the power plug so that its blades match the width of slots in the outlet.

Household electrical outlet.

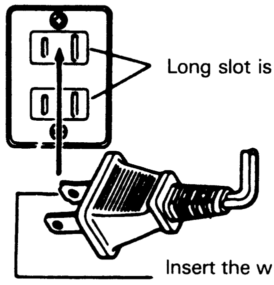

Long slot is neutral (ground) side.

Insert the wide blade into the ground side slot.